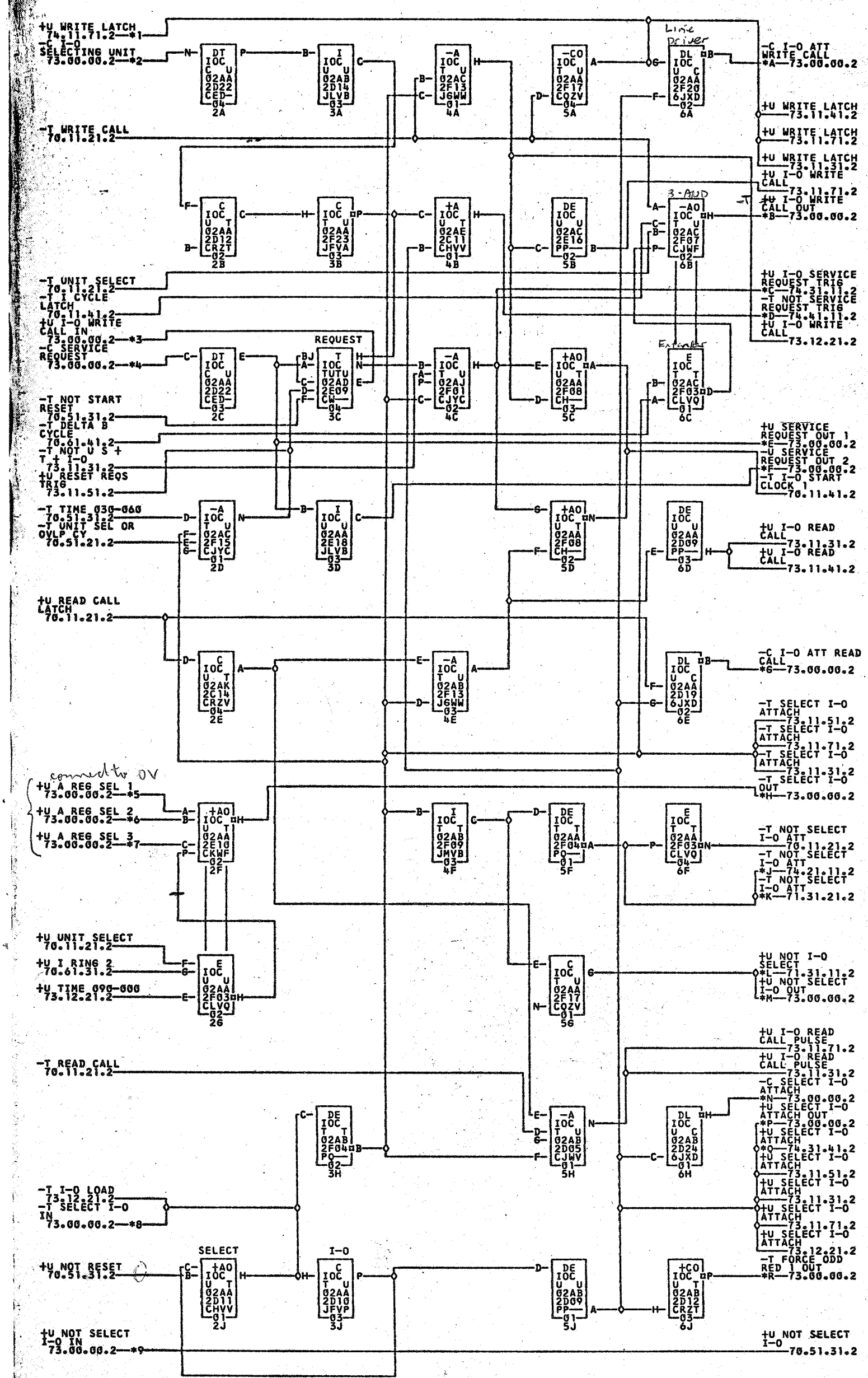

*1—02A2B25E
02A2E23L
02TD-003
02TD-121
02B1F01R
02TD-123
*L—02A2D26C
*P—02A2F26M

*2—02TD-132
*5—02A2F26A
*8—02TD-047
*B—02A2E24H
*E—02A2F24M
*H—02A2E24L
02A1D18C
02TD-007

02A2E23M
02TD-001
02A2E24M
02TD-051
02TD-041
02TD-046
*M—02A2C22A
*Q—02A2B23G

*3—02TD-050
*6—02A2F26B
*9—02A2C22B
*C—02A2B23K
*F—02A2F24N
*J—02A2B25M
02TD-054
02B1D03G

02A2E24K
02TD-002
02TD-055
02B1D03K
02TD-042
02B1A03M
*N—02A2E26E
*R—02A2F26Q

*4—02TD-113
*7—02A2F26C
*A—02A2F24K
*D—02A2B26R
*G—02A2E26F
*K—02A2D26A
02TD-115
02TD-019

COMMENTS

TAG	DATE	E.C.NO.	TAG	DATE	E.C.NO.	TAG	DATE	E.C.NO.	TAG	DATE	E.C.NO.
A	06-12-61	110320V	B	07-10-61	110324K	C	08-11-61	110324N	D	09-11-61	110324U
E	10-11-61	112235	F	12-06-61	113422	G	02-12-62	114239	H	02-22-62	114248
J	04-04-62	115278	K	07-17-62	116225	L	08-07-62	116230	M	10-23-62	116728
N	11-08-62	116353	P	12-10-62	116749B	Q	08-06-63	118306	R	09-16-63	118575B

TAG DATE
Q 29.10.63
TA 1990A
R 12.11.63
TA 604A

724255